Cable outlet for right operated table is marked with a red dot inside !

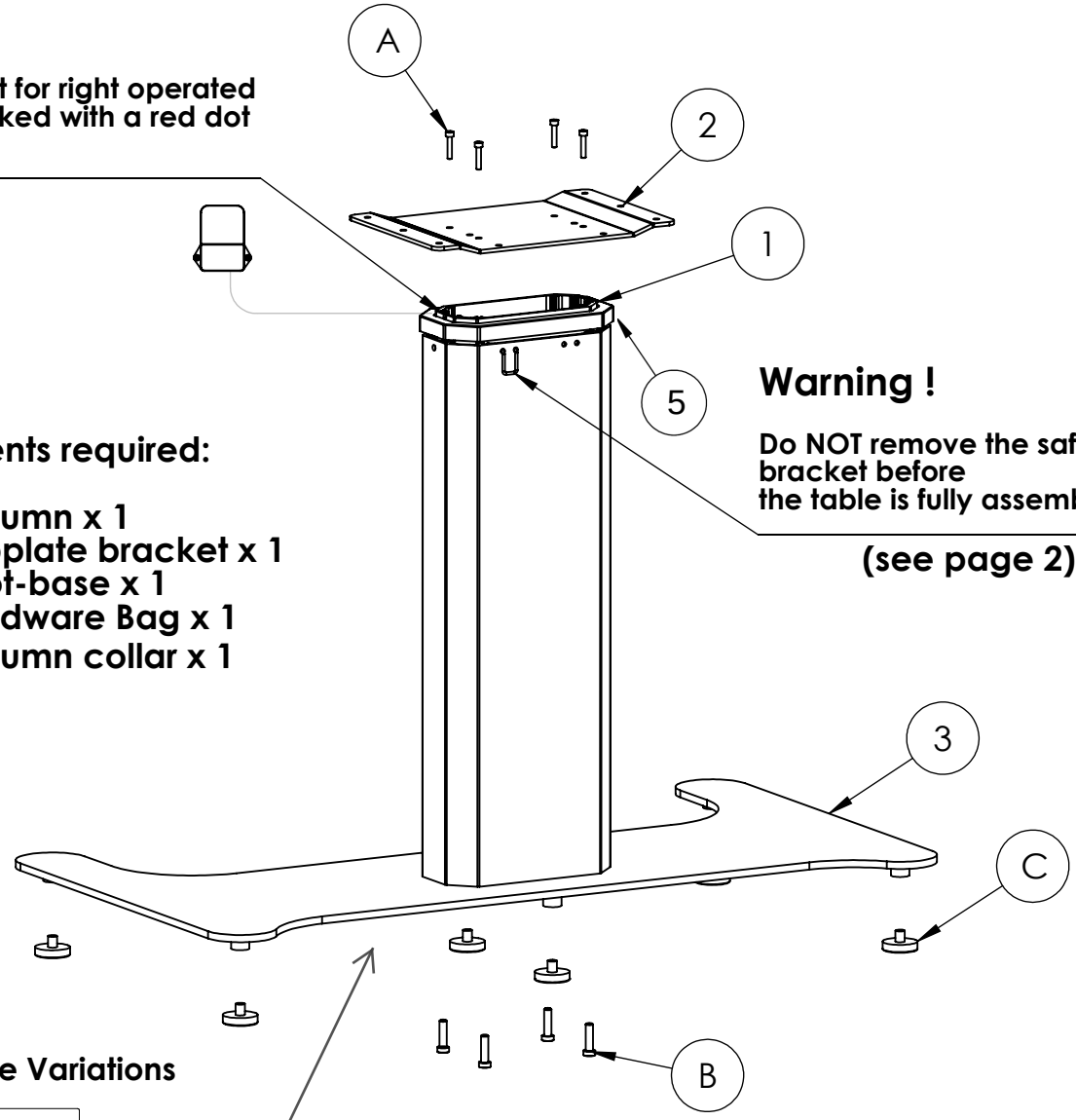

Warning !

Do NOT remove the safety bracket before the table is fully assembled.

(see page 2)

Components required:

1. **Column x 1**
2. **Topplate bracket x 1**
3. **Foot-base x 1**
4. **Hardware Bag x 1**
5. **Column collar x 1**

Foot-base Variations

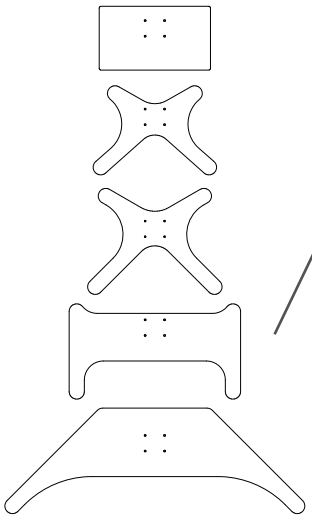

Asssembly steps:

1. **Slide column collar(5) over the top of the column. Do not lock in place. Allow column collar to sit loosly on column as shown.**

2. **Attach top-plate bracket(2) to the column(1) using four m6x25 screws(A).**
   Note: Make sure to mount the top-plate bracket(2) to the column with the side NOT marked with a red dot. The side marked with a red dot should be away from the column.

3. **Attach six table glides(C) to Foot-base(3), and mount the foot-base(3) to the column(1) using four m8x30 screws(B).**

Hardware:

A. R011058
4x (m6 x 25)

B. R011043 x
4 x(m8 x 30)

C. RM-175
6x (Glide)

D. R011905
1x (6mm Hex Key)

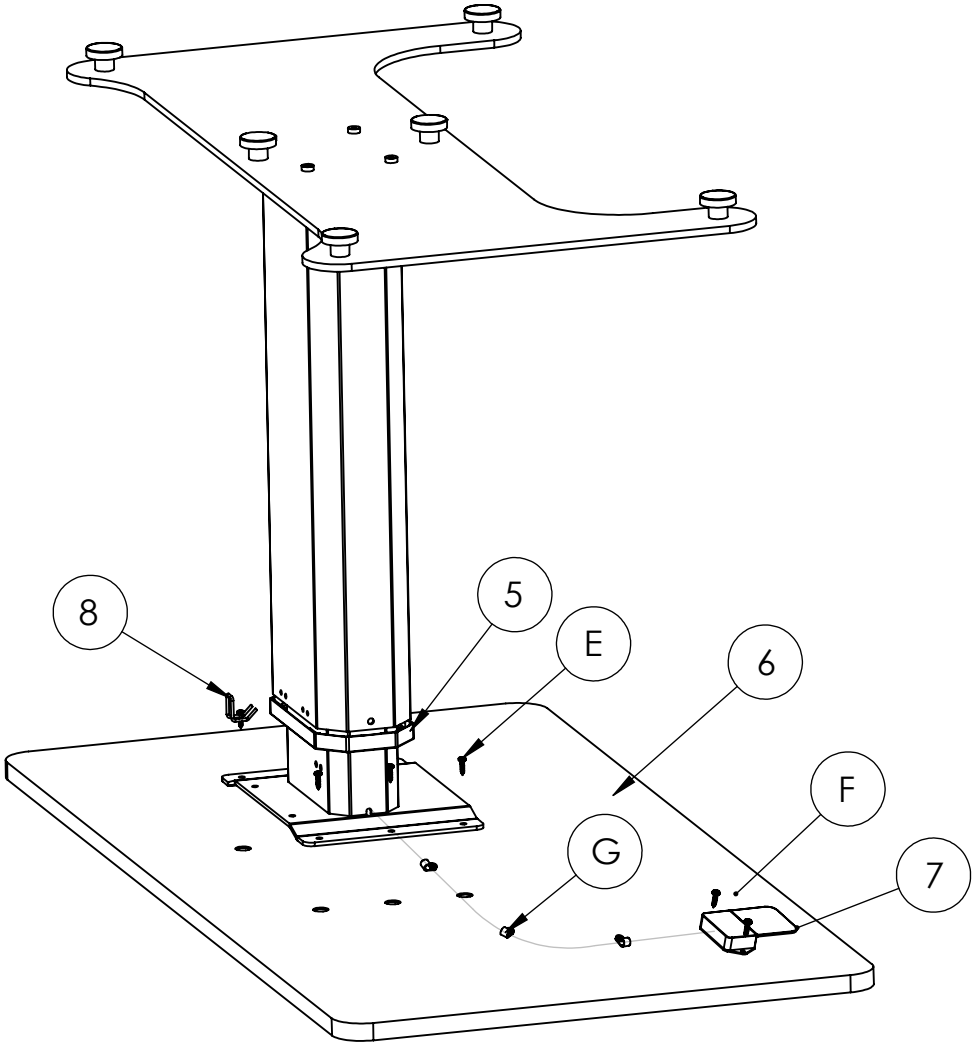

Assembly steps:

4. **Attach assembled frame to table-top(6) using six 5x20mm wood screws(E), or six flange screws m6x16mm(E1) when using threaded inserts in the table top.**

5. **Mount locking paddle(7) with two 4x16mm wood screws(F), and use cable clamps(G) with 4x16mm wood screws(F) to afix the locking cable to the table top. (NOTE: Make sure not to bend or crimp the cable.)**

6. **Place the assembled table on the floor in upright possition. Remove the safety pin(8) by depressing the handle(7), applying downward pressure to the table top(6), and pulling the pin(8) outward.**

7. **Gently press the column collar(5) in place on outer column. Workstation is ready for use!**

Hardware:

E.
R011502 x 6
(PH 5x20mm)

F.
R011500 x 5
(PH 4x16mm)

G.
R010230 x 3
(ø7,9mm)

E1.
R011057 x 6
(Flange m6 x 16mm)

H.
R011921 x1

***** For technical support please call 1.800.374.7438 #2007,servicetech@sisergo.com*****